Proceedings World Geothermal Congress 2015
Melbourne, Australia, 19-25 April 2015

Geothermal Communities (GEOCOM) - Demonstrating the cascading use of geothermal energy for district heating with small scale RES integration and retrofitting measures

István Pári, Gábor Kitley, Ömer Ceylan

Geonardo Environmental Technologies Ltd, 7 Záhony utca, H-1031 Budapest, Hungary

istvan.pari@geonardo.com, gabor.kitley@geonardo.com, omer.ceylan@geonardo.com

Keywords: District heating, system development, RES integration, rational use of energy, retrofitting

ABSTRACT

The Geothermal Communities (GEOCOM) project (www.geothermalcommunities.eu) was launched in 2010 with a vision to increase the visibility of direct heat applications of geothermal energy throughout Europe, where most attention has been paid to power generation alternatives of the same source recently. This 11 million Euro project, funded by the European Union's Seventh Framework Programme for Research and Technological Development (FP7), demonstrates a wide array of research and demonstration components to provide not only firsthand experience for the communities involved in the project, but also to feed the international scientific community with valuable results related to the currently pressing geothermal matters such as reinjection into sandstone reservoirs and trans-boundary utilisation of geothermal aquifers.

Demonstration actions, including geothermal district heating system development, integration of geothermal heating with other renewable energy sources (RES) and energy efficiency measures such as complementary retrofitting actions on selected buildings, are implemented at three demonstration sites in Hungary, Italy and Slovakia. This broad geographical coverage enables us to implement different technologies which suit the local needs the best and at the same time increases the replication potential of the project's actions.

The innovative elements range from complete utilisation of the inherent natural gas content of the thermal water (520l/m^3 @85% CH_4) via CHP engines in Hungary through upgrading and extending a 30-year-old geothermal district heating system to modern standards in Slovakia to building a brand new geothermal loop to supply the citizens of the medieval village of Montieri in the heart of the Larderello area in Italy.

Additional municipalities from Poland, Macedonia, Romania and Serbia with geothermal energy potential participate in GEOCOM as observer communities and are keeping a close eye on the project's progress and getting prepared to initiate their own geothermal programs based on GEOCOM's results. This aspect helps to spread direct geothermal applications further and into countries and regions with traditional geothermal features (e.g. hot springs) but lacking the knowledge to exploit them for their own benefits.

All the demonstration actions of the project are supported by socio-economic research, which runs in parallel with them in order to monitor the public acceptance of such interventions and the public opinion in general about geothermal energy. Without fully understanding the key driving factors at communities with such potential, the results cannot be hoped to spread and become popular. Also a full scale monitoring campaign has been introduced (with staggering results) in order to gather data on the delivered technical components, thus ensuring the availability of tangible data on the operation and savings achieved. Later on, such data can support decision makers who are willing to engage such ventures to make solid and justified decisions for the good of their community.

1. INTRODUCTION

The share of geothermal resources - despite the steady annual growth in the past decade - is still one of the lowest in the world's and Europe's renewable energy mix though both its overall potential and its engineering qualities are among the best ones compared to other renewable energy sources. In Europe – apart from the very high enthalpy geothermal fields of Iceland and Italy - a number of Central and Eastern European (CEE) countries have exceptional geothermal resources, although the traditionally investment-heavy procedures are difficult to be implemented in the region. Till now, European geothermal research has not placed enough emphasis on the opportunities in CEE despite the favourable geological conditions and the resulting high number of medium- and high-enthalpy resources available. The innovative solutions and demonstration actions proposed in the Geothermal Communities project provide a new opportunity for these markets and Europe as a whole to reduce fuel dependency and to reinforce their domestic energy portfolio.

The project objectives form a strong tool for achieving local sustainability and decentralisation whilst the results also can be applied at remote (off grid) territories (rural geothermal initiatives). It creates new investment opportunities for EU businesses, which are presently losing their good position on the worldwide geothermal markets against US and Japanese competitors. Geothermal developments may also create new opportunities for other sectors, such as balneology or eco-tourism, which are environmentally friendly, service-intensive ways of creating profit in a region (CEE), where polluting and inefficient, energy-intensive heavy industry has often been conserved for social (employment) reasons.

Although the project has an all-European dimension, it takes into account the local specifics of Central and Eastern European conditions, which is a key factor ensuring the success of the project since CEE has a very high potential geothermal reserves, but research and innovation rarely focuses on this region. The lack of innovation and public awareness towards the importance of energy efficiency measures integrated with geothermal initiatives have resulted in grossly inefficient installations and systems in place at several sites (i.e. wasteful heat exchangers, non-cascading utilisation with the discharge of still warm thermal water with

high dissolved mineral content into surface water bodies, space heating with virtually no insulation, heating of old buildings that do not satisfy even the most basic energy efficiency standards). This wasting of the regions' biggest renewable energy source must come to an end. The project offers the demonstration of cost-effective innovative solutions for geothermal heat utilisation with research and some demonstration efforts dedicated to the small-scale integration of other RES with geothermal base. This approach contributes to improve the competitiveness of geothermal technology even in the relatively highly subsidised CEE energy utility systems. The results present an opportunity for these countries to install complex and efficient RES-based heating systems in a sustainable fashion. It is expected that the proposed cost effective solutions along with the demonstration facilities combined with the strong dissemination actions will result in a multiplier effect reaching beyond the participating countries and into regions with similar geothermal qualities.

The main objective of the project is to implement pilot-scale demonstration of the geothermal energy utilisation on the 3 selected demo-sites, Morahalom (Hungary), Galanta (Slovakia) and Montieri (Italy). The demonstration activities are complemented by applied research tasks on (1) the technological background of the geothermal resources including system optimisation and system integration; (2) and also on the socio-economic aspects of the current and future investments. One of the key elements of the project are the efficient dissemination and training activities that will both raise public awareness on RES application and help transferring the project technology and approach to other communities in the region and beyond.

In short the direct objective of the project is to demonstrate successful, innovative and inspiring examples for the utilisation of geothermal energy for heat generation employing cutting-edge, environmentally sustainable and cost competitive technologies combined with innovative energy efficiency measures and retrofitting. All three pilot projects should be considered as an intermediary phase between ongoing investments and planned projects in the future that will take into consideration the lessons learned from the current phase. The project results and approach facilitates future investment on the regional geothermal resources and will help their better understanding and perception among the investors, local and regional decision makers, the public and the stakeholders. This paper focuses on the innovative demonstration aspects at the three communities, addressing the energy efficiency measures and discussing the resulted savings and benefits of the actions carried out.

1.1 Morahalom, Hungary

Morahalom is a small town (pop. 5800) situated in the south of Hungary on the border with Serbia. It used to be listed among the 50 most disadvantaged communities of Hungary, but the investments of the past decade - upon some the current project also builds on - launched it into the top 10 most dynamically developing settlements. The installation of the geothermal district heating system can be considered the most influential and of highest impact of them all, which also presented a solid foundation to the local GEOCOM components. It is worth noting that there are two separate geothermal heating systems in place in the town. One of them was developed solely for balneological use at the local spa, the already mentioned district heating system has a much wider impact on the community. The detailed description of the latter is out of the scope of the current paper, however a few of its key specifications have to be highlighted. The doublet configuration of one abstraction well (B-45) and one injection well (B-46) (1270m and 900 m respectively) allows the sustainable resource management of the 63°C thermal water produced on site from the Upper Pannonian sandstone reservoir with flow rates in the range of 25-30m^3/hour in summer and 60m^3/hour in winter. The annual thermal water production on this system is around 190.000m^3. The full loop runs a total of 3,054 kms between the two wells serving with heat and domestic hot water (DHW) a total number of 12 municipal-owned public buildings mainly in the downtown area. By having the geothermal cascade system in place the proportion of renewable energy within the energy mix of public institutions has grown from 0% up to more than 80% - offsetting the use of 542.029 m^3 natural gas annually, while providing 18.700GJ of heat per year. As a direct result annual heating-related emissions have also been reduced significantly (by 1590t of CO_2, 585kg of N_xO_x and 1113kg of CO). The GEOCOM project aimed to improve the cascade system with a set of new elements to ensure total utilisation of geothermal energy and to demonstrate cutting edge energy efficiency/retrofitting measures that are currently lacking from geothermal projects in Eastern-Central Europe. These new features are as follows:

1.1.1. CHP utilisation of waste gas

Thermal waters of the Morahalom region (and in a broader context, the south of Hungary) can be described by their rather high inherent dissolved gas content (average 520 l/m^3 with 87% CH_4). In other words for every 2 m^3 of produced thermal water we have an average of 1 m^3 methane (annually about 95.540m^3) which was previously released to the atmosphere. Within the project there were two small-scale combined heat and power (CHP) engines (4-stroke, in-line 4-cylinder engine) installed at each of the production well sites to utilise the separated gas content of the produced fluid which equals to roughly 89.950m^3 CH_4/year . (Apart from the B-45 well of the cascade system there is another one (B-40) exclusively serving the local spa, with no feed to the district heating system and its water is not re-injected either, nevertheless it also benefits from this novel gas separation and utilisation technology). The following aspects were taken into consideration when the equipment was devised and installed: 1) To make the associated gas of the produced thermal water with 65-98 % CH_4 content suitable for a continuous, operation-safe, temperature-independent communal combustion or for electric and thermal energy production with gas engine based CHP units; 2) To ensure effective, pressure controlled dew-point adjustment of the produced gas to avoid hydrate formation in the pipes and conduits; 3) To cease the atmospheric discharge of CH_4 while meeting rigorous EU emission standards; and 4) To set up an automated system with no supervision to intervene in case of system malfunctions or failures.

In standard operating conditions, the technological process is automatically controlled, though the gas preparation can also be operated manually during start-up. The thermal water is pumped from the reservoir and into the production pipe as a single phase fluid until it reaches the bubble point, where the separation of the dissolved gas begins. The gas is carried on by a pressure booster from the degassing container through the dew-point adjustment cooler and the drip catcher into the gas engine. From the lower part of the drip catcher, the water condensed from the gas exits through the dedicated discharge line. From the drip-catcher, the gas reaches the CHP engine through the inlet end fitting and the adjustment valve, where it burns as the fuel of the engine. The electric power generated in the CHP unit reaches the consumers through the outlet fitting. The thermal output is transferred in the form of hot water with a temperature of 90-120 °C. It is produced by the heat exchangers of the CHP units with additional input from the

cooling of the smoke gas and it is charged into the district heating system by pumps and - in case of the stand-alone application at the spa - through a secondary circuit into the spa's domestic hot water production system.

The gas preparation system and the CHP unit are separately controlled. Both devices have a standard gas concentration and fire protection system in place and equipped with a number of safety features such as the inlet gas pressure adjuster and the automatic emergency shutdown protocol in case of malfunction to ensure safe operation.

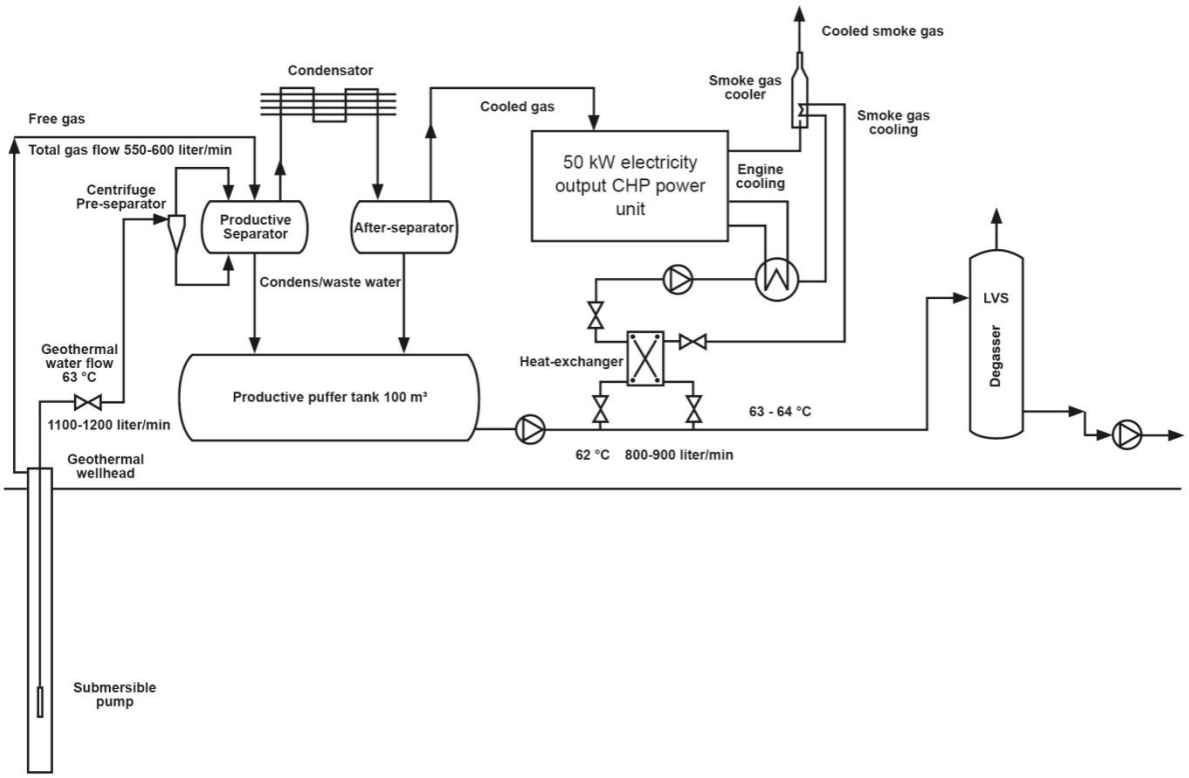

Figure 1. Schematics of the waste gas utilization setup at the B-45 site

According to gas sample analyses and technical feasibility studies prior the implementation of the project, 2-2.5 kW electric energy and 6-7 kW thermal energy was estimated that can be produced in the CHP units from 1 m^3 of separated gas. Now having both CHP engines up and running it can be concluded that the average power output of the unit installed on the B-45 well is 2,73 kW/m^3 whilst the thermal yield is 4,366 kW/m^3 with a total efficiency of 84% ($34\%_{el}$ + $50\%_{th}$). The total output of this engine is 116kW ($50kW_{el}$ + $66kW_{th}$). These values for the other CHP unit at the B-40 well in the spa are 2,456kW/m^3 electric and 7,008kW/m^3 thermal output with the same efficiency, but slightly less total output (90kW). The generated power is partly used on-site to run the pumps and other equipment while the rest is fed to the grid. The thermal output of the B-45 engine is transferred to the circulating thermal water which gains around 2°C as a result, which roughly matches the heat loss over the total length of the pipeline. At the spa the extra thermal output supports the in-situ DHW supply system. Utilising this trapped gas not only negates inefficiencies such as the heat loss over the full geothermal cascade system but burning methane instead of releasing it reduces the carbon footprint of the whole operation given that the comparative impact of CH_4 on climate change is over 20 times greater than CO_2 over a 100-year period. In addition the excellent combustibility of methane allows a smoother burning and lower maximum burning pressure compared to other gases which translate a reduced load on the various engine parts ensuring a much longer lifetime.

1.1.2 High-power heat-pump heating station

Mórahalom, as a result of its excellent setting is able to provide most of its public buildings with geothermal district heating from the local thermal wells. Via a series of individual heat exchangers at each of the served buildings the produced 62°C thermal water is cooled down to 40°C by the end of the cascade system. At this stage the 40°C water still contains considerable amount of energy which was not harvested earlier, but was sent to be re-injected. Within the GEOCOM project a heat-pump heating station was planned and delivered which can utilise the significant residual energy content of the already used thermal water (cooling it from 40 to the minimum of 20°C) to produce over 600kW thermal energy with an average COP=4,5-5,0 prior it gets re-injected. This additional energy (418kW) can be easily used on site for the development plans include some higher profile buildings to be erected in the near future in the immediate vicinity of the new heat-pump station in addition to the recently completed Town Hall and Market Hall, thus creating a sufficiently dense heat market for such an investment. At the moment no such thermal water - heat pump coupled system with similar efficiency operates either in Hungary or elsewhere in Central-Eastern Europe.

The quantity of the thermal water (200-250 l/min) reaching the primary heat exchanger is self-regulated, making the system capable of adjusting the thermal output to meet the reduced need during the transitional periods (early spring, late fall). Since no power is required to operate the primary heat exchanger, heating energy produced via this way has priority over the heat pump application which has some power demand (approx. 90 kW). In case the outside temperature drops below a certain value (-5 C) this basic

system alone can no longer provide sufficient thermal output and needs to be backed up by the heat-pumps. At this point a technical challenge had to be overcome related to the minimum flow rate the heat pumps require for a seamless operation, which is 15m^3/hour. This means that an automatic system activates whenever the heat pumps are turned on to provide the sufficient flow (15m^3/hour or more) of the thermal water to keep them running. Due to its mineral composition the received geothermal fluid cannot be directed straight to the heat pumps, but the installation of an intermediary heat exchanger was needed to protect the main condenser from scaling. In this separate and closed loop a dedicated pump circulating the 20% mixture of mono-ethylene-glycol and water ensures the heat transfer to the main condenser. In order to secure a continuous supply of hot water there was a 3000 litre buffer tank installed on the forward going side of the system to hold the heated medium of 52°C (max 55°C). The closer this heat is to the maximum the lower the COP of the system will be.

In the summer period the heating energy is used solely for domestic hot water (DHW) production since low enthalpy systems (less than 90°C) - similar to the one in Morahalom - cannot be employed economically for cooling purposes. DHW production however has proved to be a sound and economic utilization of thermal water in the summer as the reduced heat demand yield higher water temperatures in the whole system. During the summer DHW needs are met with the use of 20-200 kW DHW-dedicated heat exchangers at all the facilities, institutions and connection points that are linked up with the geothermal loop.

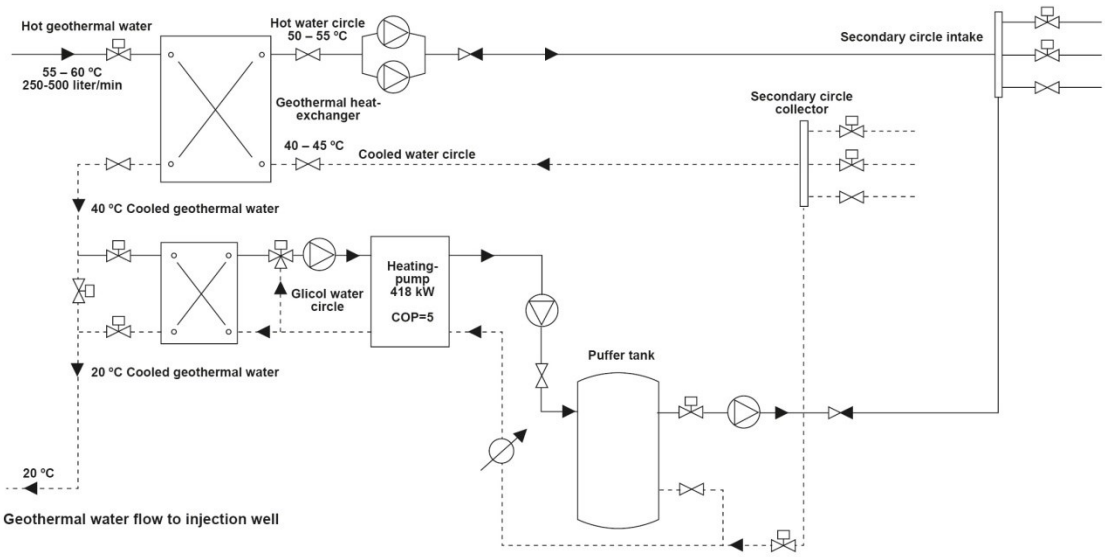

Figure 2. Schematics of the heat-pump heating station

Not having installed high demand energy sinks for summer use has an important geological reason. The local reservoir is Upper Pannonian sandstone which demands for a periodic pattern (high-low) of pumping intensity (abstraction and reinjection alike) in order to be able to regenarate, thus ensuring long term sustainable production of thermal water. Suspended particles present the main risk for well and formation integrity causing various issues such as wellbore narrowing (sandface bridging), wellbore fill-up, perforation plugging, and formation damage in case of inadequate periodic moderation of pumping intensity. Year-round abstraction can lead to the degradation of subsurface water levels and may yield decrement, while permanent reinjection is likely to cause capacity impairment and/or cloggig of the reinjection well. Injection of heat-depleted brines into clastic sedimentary reservoirs with alternating clay, sand and sandstone sequences has long been reported as a sensitive matter among petroleum and geothermal operators.

Researchers at the University of Szeged have aimed at the elaboration of a uniform technological know-how of the economic, safe and standardized procedure of reinjection of used thermal water into Upper Pannonian sandstone. A basic element of this procedure in “summer-mode“ is the significant reduction of abstraction and reinjection intensity in order to allow reservoir recovery to happen. In accordance with these research results, the Mórahalom-system has been, is and will be operated in the summer period under the consideration of reservoir protection aspects and in a reduced mode favouring long-term sustainable abstraction and safe reinjection.

1.1.3 Retrofitting and RES integration

Some key public institutions and buildings (cultural centre, elementary school, sports hall and kindergarten) were involved in the complex retrofitting campaign which’s primary aim was to reduce the operational costs, resulting in significant savings at the owner municipality’s annual budget. The total floor area of the subject buildings (dated between 1935 and 1972) was up to 2000 m^2 and their combined annual natural gas consumption for heating and domestic hot water purposes was in the range of 130-140.000 m^3, which translated to 85% of their overall operational costs. The exceptionally poor energy efficiency of the building envelopes (average of 130-210 kWh/m^2/yr, one structure with 590 kWh/m^2/yr) was coupled by very outdated building engineering solutions such as boilers with diffusion burners and far greater capacity than the actual heat demand. It was evident that major savings can be realized by connecting these estates to the new cascade system and by installing additional renewable energy sources (solar thermal

panels) to complement the geothermal base load the traditional natural gas-based features will be rendered to serve only as backups in the future..

By delivering a fairly standard energy upgrade of the selected buildings first the doors and windows were replaced followed by the insulation of the building envelopes using 10 cm polistyrol slabs. These measures only combined with linking up to the geothermal cascade system would have already resulted in a drastic savings, but the overall efficiency was improved even further by installing 121m^2 solar thermal collectors (TS 300 Flat Plate type) on the rooftops to cover with ease the daily demand at the target buildings. It is worth mentioning that Morahalom is not only very fortunate with is setting in terms of it subsurface geothermal resources, but the south of Hungary also excels regarding the most intensive solar radiation and the highest number of annual sunny hours (~2000/a) in the country as well. Detailed discussion on the achieved goals will be discussed later on in this paper.

1.2 Galanta, Slovakia

The city of Galanta (pop. 16.500) is situated in the SW part of Slovak Republic, about 50 kms NE from the capital city, Bratislava. Galanta pioneered in the use of renewable energy sources among the countries behind the "Iron Curtain" by developing its own geothermal-based district heating system in the early 1980s. The two production wells (FGG-2 (drilled in 1982) and FGG-3 (in 1984)) - tapping into the reservoir of Upper Pannonian sandstone (similar to the one at Morahalom) at 2101m and 2102m depths respectively - provide the necessary quantity (regulated 20-25 l/s each) of the 78°C geothermal fluid for a whole district of the city, where it is utilised as a heating agent and also for DHW purposes. Prior to the launch of the project multiple apartment buildings, a hospital, an elderly home, a nursery and an elementary school was connected to the heating system. The current legislative framework in effect doesn't regulate reinjection, which accounts for the discharge of about 0.5 million m^3 of used, still warm and highly mineralised thermal water into the surface waters with all its unfavourable impacts on the environment. Since introducing new policies for a more sustainable management of this natural resource was out of the scope of the GEOCOM project, local activities were focused on actions which could increase the overall efficiency of the existing setup by connecting additional estates (increasing the total heated floor area) to the geothermal loop and by improving the energy efficiency parameters of those buildings which are already benefiting from the service. Within the frame of the project the thermal capacity of the geothermal system was increased by 1239 kW. This investment has triggered the erection of three new municipal housing units (total 101 new apartments) and a few more facilities within the range of the district heating system which are today connected to the loop. The project focused at this demonstration site also on improving the energy efficiency of those estates which are supplied by the geothermal heat. For this reason 3 housing units, a kindergarten and a primary school were selected as subjects for the model retrofitting actions complemented by basic system integration measures.

Local real-estate development initiatives in the vicinity of the geothermal source called for a sustainable and green energy supply resulting the partial refurbishment and extension of the 30+ years old district heating system within the frame of our project. The new buildings are provided by geothermal district heating and year around DHW service. By expanding the loop 1955 kW of additional heating energy is delivered to the consumers offsetting approximately 237.000 m^3 natural gas consumption and 440t CO_2 emissions annually. By having the new facilities erected proximal to the main heating centre significant saving were realized on the relatively short pipelines keeping the investment costs around 75€/kW, thus ensuring a reasonable return of investment (ROI) period of 10 years. This aspect of the demonstration activities in Galanta yielded an excellent opportunity for the municipality to improve its social housing program by building 3 units of 27 flats each and also boosted some local businesses that chose to be linked up with the district heating system to increase their competitiveness by not being exposed to fluctuating gas prices.

The retrofitting action carried out at three multi-stories housing units in the pilot district were aimed at demonstrating a more efficient use of heating energy, thus improving the overall performance of the geothermal district heating system. The selected block-of-flats represent a very common housing solution in the region of East-Central Europe rendering them to be considered as potential pilot actions of improving energy efficiency at a unit level. Prior to the GEOCOM interventions the target buildings – made of prefabricated concrete blocks - were characterized by very poor energy performances (~78 kWh/m^2/yr), which caused significant losses both to the tenants and to the district heating system. Standard façade and roof insulation combined with windows replacement improved all the key parameters, reducing the amount of heat needed to achieve the same level of comfort. The surplus heat, which was previously wasted, can be transferred to other downstream consumers allowing them to cut on their complementary natural gas use and ultimately on their operational costs. Two public institutions (an elementary school and a kindergarten) on the heating loop were also subject of refurbishment, though interventions were limited to the replacement of the windows at these locations. However such a restricted set of action alone was able to bring significant savings making it a medium cost high impact delivery. In line with the overall aims of the project the base geothermal heat source at the target buildings was combined with another renewable energy source, in this case solar PV panels were installed on the rooftops. The very small scale, micro-plants (1.5kW each) were designed to cover the power needs of the common areas at the housing units while a larger (5kW) unit had been planned to offset some of the elementary school's power need.

Despite the current legislative framework is not in favor of reinjection, it might change in the future, as more and more communities in the region will start utilizing the same aquifers for their own benefits and sustainable energy production will become an even more pressing issue. In order to be prepared and know how to deal with reinjection related tasks, Galanta had a full study made and delivered on the multi faceted subject of reinjection in the region. The hefty documentation details the geology-, engineering- and economy-related challenges of such a venture, making all parties and stakeholders fully aware of all those risks, costs and problems they might face if they will engage one day. For this work financial contribution was provided from the European Commission through the GEOCOM project.

1.2 Montieri, Italy

The medieval village of Montieri (pop 1250) is located in the southern flank of the Larderello Geothermal District, about 15 kms SSE from the city of Larderello in Tuscany. The GEOCOM activities involve the whole community delivering three distinct actions: **1)** Building a brand new and highly efficient district heating system to utilize high enthalpy geothermal steam from the Montieri-4 well (courtesy by ENEL) **2)** Retrofitting a number of selected public buildings and **3)** deploying 8.5 kW solar PV as part of the system integration scheme. The sheer volume and complexity of these investments alone would render the Montieri demonstration site to be the flagship component of the GEOCOM initiative. In addition to this the allocated budget further reinforces its special status among the project demo sites. The total budget of our project is just over 11.5 million Euro of which more than 8 million Euro comes from the Regional Government of Tuscany exclusively to support the activities in Montieri.

The project's main objective in Montieri was the construction of a state-of-the-art geothermal district heating system for space heating and domestic hot water production for a total of 425, mostly private users, but including 8 public buildings and institutions, too. The capacity of the heating network and the number of available connection points were sized and calculated to cover the entire demand potential even if new consumers will be connected to the system in the future. Montieri's unique medieval structure is characterized by a network of narrow alleys, which used to host a very old set of underground utility lines. It was realised early on, in the planning phase that the laying of the pipes for the geothermal district heating system has to be accompanied by the complete overhaul of these auxiliary systems (water, sewer etc) along these cobble stone-covered alleys at the entire project area. One of the several novel elements of the district heating system is that the plant is fully automated and controlled entirely by a special automation and remote control system which also facilitates direct link to the switchboards of the heat metering utilities. The control unit is designed to be able to manage local and remote key system parameters, such as pressure set-points, temperature set-points, operating points of the circle and in addition to that it is capable of intervening on the plant itself in a timely manner via advanced alarm management. It is also connected to ENEL's network to optimize the synergy between the two systems and promote effective exchange of data. This solution allows a state-of-the-art remote control (via PC or via internet with web-server) optimizing the management phase and allowing the management of the entire district heating system with a single operator.

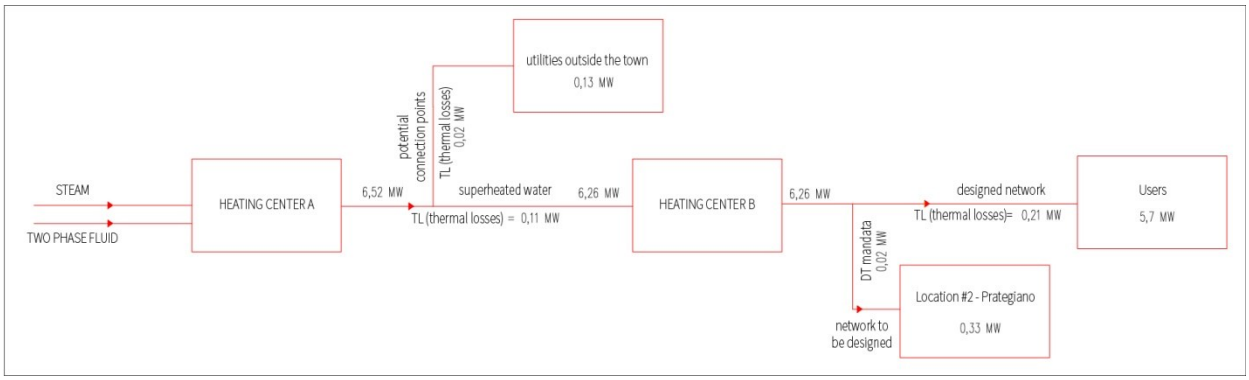

Figure 3. Basic schematics of the district heating system of Montieri

The heating system chosen to be delivered is technologically highly innovative making in one-of-a-kind among other geothermal district heating systems currently operational in the world. It is supplied primarily by geothermal steam and for a smaller instant by a two-phase fluid both received via separate ducts (one for the steam one for the two-phase fluid) connecting the Montieri-4 well with ENEL's Travale 3 power plant (20MW) north east of the town. One of the innovative aspects of the project is that the energy content of the available, but previously unused two-phase fluid (flow rate 0,4kg/s, 150°C, 10-12 barA) is also harnessed yielding roughly 10% of the overall output. In addition the two-phase fluid itself can cover for Montieri's DHW needs during the summer period, but in case of occasional higher demand it can be complemented by steam too. It is evident that the use of this innovative element promotes improved energy efficiency and resource savings. The heating demand was calculated by conducting surveys and comparative evaluations and simulations. The total heated volume was estimated to be in the range of 111.000 m^3 which concluded the output of the heating system to be 5700kW. In addition there has been an extra standard 10% safety factor and a specific prerequisite of 0.006kW/m^3 for DHW purposes added to this initial value making the final system requirement to be 6164kW. There was special emphasis put on selecting the most ideal locations for the heating stations and planning the best route for the pipeline in order to mitigate any related visual impact and minimize pressure drops, hence energy consumption respectively. The new infrastructure, especially the buildings follow the architectural pattern of the region by using stone revetments, tile-roofing and gutters with wooden beams.

The heating system includes three distinctive and completely separated fluid circles: 1.) steam/two-phase circuit (the condensate derived from the steam is returned directly in the two-phase agent, making a fully closed loop with no emissions); 2) closed loop of heat transport between the primary and secondary heating stations, "A" and "B" respectively by means of circulations of superheated water in DN200 PN25 steel pipes of 2x 2200m, which are insulated by polyurethane foam and enclosed by HDPE liners; 3) the distribution circuit (~5100m) of the heat by means of hot water starting off from the heating station "B". The primary heating station (A) uses the steam and two phase fluid received from ENEL to overheat the water circulating in the closed circuit connecting it with the secondary heating station (B), where the heat of the superheated water is transferred via a set of heat exchangers to the water circulating in the closed circuit of the distribution network. The two-phase fluid is primarily used to preheat the returning water from the secondary heating station.

The steam enters to the primary heating station saturated at 207,2°C and 18 barA of pressure. When it leaves the dedicated steam heat exchange modules it is still 150°C and 17 barA and enters the dedicated two-phase heat exchange modules with the same

temperature but at a lower pressure of 10-12barA only to exit the same modules at about 100°C and 8-10 barA of pressure. Each heat exchanger is equipped with a self adjusting system to ensure maximum efficiency when making the superheated water to carry the heat to the secondary heating station. At maximum load the plant is capable of generating a 50°C thermal gradient, heating the returning water from 80°C inlet temperature up to 130°C outlet temperature. The superheated water between the two heating stations is circulated by an 11kW rated power pump unit installed at the heating station "A" with a maximum of 115m^3/h flow rate at 4 bars of pressure. In addition external inverter was attached to the pump unit to help maintain an economic operation pattern. The device is controlled by the temperature of the returning water from heating station "B" or by the actual heat demand that is required there, which adjust the speed of the pumps, thus no unwanted heat capacities are transferred needlessly. Station "B" accommodates two plate heat exchangers of 4000kW capacity each. One of them is usually on standby, but in case of peak demand both units are operational at 78% of their nominal power, generating 6,26 MW thermal output. The generated hot water of 95°C is pumped to the heating utility network at a maximum flow rate of 180m^3/h and 2.5 bars pressure while the returning water has an average temperature of 64°C which concludes the thermal loop. The system is complemented by a number of auxiliary features such as water softening unit, compressor and emergency generator. Figure 4 explains the connection between the various parts of the heating system in detail, demonstrating the combined full use of steam and the two-phase fluid. It is important to point out that system is capable of running with certain modules deactivated both on the steam or the two-phase fluid side in order to match the actual demand the most precisely.

The retrofitting component –similarly to the other two demonstration sites – was also a mandatory element of the project activities here, too. The medieval building stock under architectural heritage protection presented a major challenge for the architects to deliver feasible energy efficiency solutions for these very old structures. Upon the start of the project most parties were convinced that the proposed 40% reduction of energy needs for the buildings coupled with a 100% fossil fuel free status while meeting all the requirements of the cultural/architectural heritage status is actually a viable scheme. In such an architectural heritage site, the potential for intervention at the building envelope is quite limited. However some other measures can be taken in order to reduce energy needs, to improve thermal comfort, air quality, natural lighting, all meeting the regulations and are suitable for these building types.. In addition, Montieri represents a challenging site for defining and testing a qualitative architectural integration of standard renewable energy technologies (such as PV and solar thermal systems) again due to their visual impact on the protected estates. The 425 residential dwellings which were selected to be linked to the district heating system were the primary subjects of the proposed innovative retrofitting measures such as: opening of skylights to increase the natural ventilation, selective covering of the massive walls from inside in order to optimize the comfort conditions and the thermal inertia of the building and solar photovoltaic technologies integrated into roofing and glazing just to name a few.

Figure 4. The medieval town center of Montieri

The initially proposed measures for retrofitting the building stock in Montieri had been challenged by various factors over the course of the project. Once it was clear that the original plans cannot be delivered a detailed assessment of the key issues were collected and a mitigation plan was drafted listing a set of viable interventions which have been updated and tailored in order to meet the targets set by the proposal while not confronting any currently effective legislation. The building stock in Montieri is largely characterized by thick stone masonry walls and floor and roof systems made of wooden load bearing structures. Local urban and architectural heritage regulations restrict any intervention on these buildings' facades and roofs in order to preserve and maintain the current profiles and dimensions of such buildings (including the wooden window frames) for the sake of keeping the cultural character of the historic town. Despite all the research efforts carried out so far (even a full PhD thesis had been delivered on the subject), and in spite of all the proposed solutions aiming at the improvement of the energy performance of all these historic buildings, it had to be concluded that this task has a whole lot more angle than originally anticipated.

At this stage of the project, the main objective is to decide about whether the initially set thermal requirements for these structures could be achieved on the affected building stock with the currently available energy retrofit technologies, which also suit the owners, or not. Research has shown that certain technologies could deliver the desired thermal specifications while meeting the standards set by the cultural heritage protection authority, but they are way too expensive solutions for most of the inhabitants in Montieri. Since the retrofitting component was meant to be co-funded by those home owners whose properties were affected, the project cannot impose on the dwellers any costs which they are not willing to pay. In short, the local population is no longer interested in energy efficiency measures on their homes simply because the cost of their heating will have been dropped by 90% once the district heating system will be turned on and the rate of return on any of the proposed retrofitting measures are considered to be way too long. In order to tackle some of these issues and to maximize building energy performance, the initial plans were not only extended to local public buildings, but a series of technical guidelines were drafted too, setting minimum thermal insulation requirements, which on one hand were less ambitious than the ones in the original concept, and on the other hand could potentially be suited for Montieri and other local historic towns as well as for Italian and European ones. Results of the monitoring activity (as part of this initiative) are expected to prove energy savings and improvement of indoor comfort as a direct outcome of the installation of the updated retrofit measures.

HEATING CENTER A

HEMS2	HEAT EXCHANGE MODULE OF STEAM
HEMS1	HEAT EXCHANGE MODULE OF STEAM
HEMB2	HEAT EXCHANGE MODULE OF BI-PHASE FLUID
HEMB1	HEAT EXCHANGE MODULE OF BI-PHASE FLUID
RCY1	RECYCLING
EPG1	EXPANSION AND PRESSURISATION GROUP
ET1	EXPANSION AND PRESSURISATION TANK
SWS1	SOFTENED WATER STORAGE AND EXPANSION TANK
DWS20	DOMESTIC WATER STORAGE TANK
WST1	STORAGE TANK FOR WATER SOFTENER
SRG	SOFTENED WATER REFILL GROUP
COMP1	AIR COMPRESSOR
GS1	SOFTENER GROUP
ST3	SALT TANK
SOR3	SOFTENER RESIN
ST4	SALT TANK
SOR4	SOFTENER RESIN
P2	RELIEF PUMP
RDP1	REAGENT DOSAGE PUMP
RST1	REAGENT STORAGE TANK
TL	THERMAL LOSSES CALCULATED FOR THE SECTION OF THE PIPE.

HEATING CENTER B

SG	SOFTENER GROUP
ST1	SALT TANK
ST2	SALT TANK
SOR1	SOFTENER RESIN
SOR2	SOFTENER RESIN
WST	STORAGE TANK FOR WATER SOFTENER
SWS	SOFTENED WATER STORAGE AND EXPANSION TANK
DWS.10	DOMESTIC WATER STORAGE TANK
WFG	WATER FILLING AND REFILLING GROUP
HEM2	HEAT EXCHANGE MODULE
HEM1	HEAT EXCHANGE MODULE
EPG	EXPANSION AND PRESSURISATION GROUP
ET	EXPANSION TANK
RCY3	RECYCLING
COMP1	AIR COMPRESSOR
P1	RELIEF PUMP
RDP2	REAGENT DOSAGE PUMP
RST2	REAGENT STORAGE TANK

LEGEND

- STEAM LINE
- CONDENSATE LINE
- SUPERHEATED WATER CIRCUIT
- HOT WATER CIRCUIT
- DOMESTIC WATER LINE
- DRAINAGE SYSTEM
- SAFETY RELIEF
- COMPRESSED AIR
- RESERVE PUMP
- PRIMARY PUMP

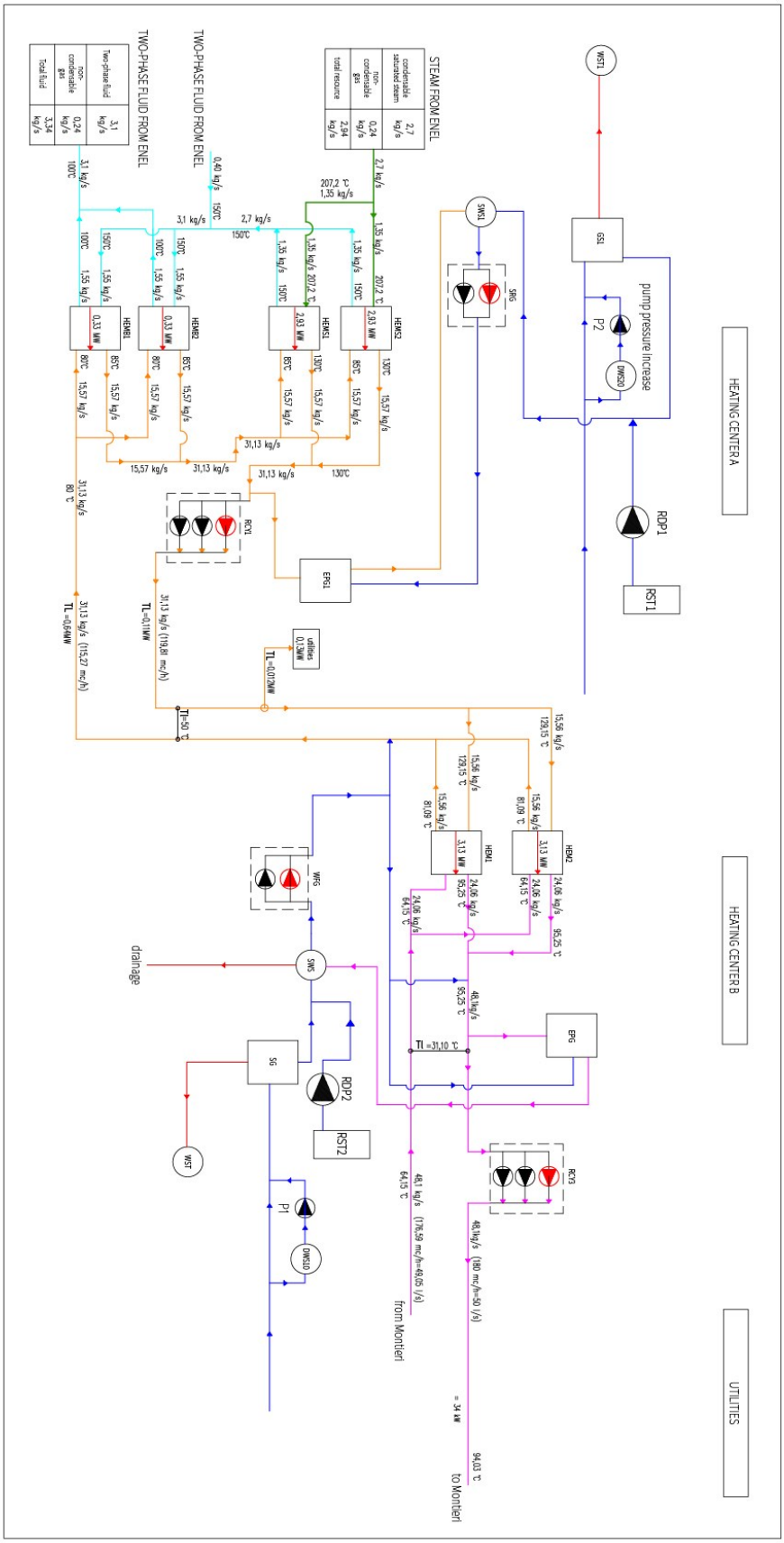

Figure 5. Detailed schematics of the district heating system of Montieri

2. RESULTS

In order to be able to track and verify the efficiency of the investment components at each of the demonstration sites a thorough and detailed monitoring campaign had been devised and launched. Morahalom and Galanta have already been yielding valuable data on significant savings achieved via the project activities and Montieri is going to implement its own monitoring system once all the project elements will have been finalized by the end of 2014. Monitoring data is sensitive to a number of external factors, such as mild winters which occasionally may cloak the maximum efficiency the system is capable of, but the before-after datasets presented here are speaking for themselves, indicating improved efficiency and reduced operational costs regardless of the weather or other external factors.

2.1 Morahalom

In order to be able to adequately assess the results brought by the project activities a baseline had to be set up which reflects the pre-GEOCOM conditions and which can be used as a base of comparison for each of the demonstration components. As the project started in 2010 the year of 2009 was chosen for this purpose, as the very last one without any measures in place to improve the energy balance in Morahalom. The methodology of acquiring the data was the tedious processing of all the utility bills on a monthly basis issued by the service provider based on the natural gas consumption of all three target buildings (cultural center-elementary school complex; gymnasium; nursery school). This detailed dataset is shown in Table 1 below also including the amount of offset natural gas and annual CO_2 emission values for each year compared to the base line values of 2009.

	2009				2010				2011			
	SCHOOL	GYM	NURSERY	TOTAL	SCHOOL	GYM	NURSERY	TOTAL	SCHOOL	GYM	NURSERY	TOTAL
Heating (m^3/y)	54192	17968	22594	**94754**	48653	14983	19909	**83546**	4525	525	5242	**10292**
DHW (m^3/y)	28315	360	7722	**36397**	20534	896	7979	**29410**	14193	24	4849	**19066**
TOTAL	**82507**	**18328**	**30317**	**131152**	**69188**	**15879**	**27889**	**112955**	**18719**	**548**	**10091**	**29359**
Offset CH_4 (m^3/y)	0	0	0	**0**	13319	2449	2428	**18196**	63788	17779	20225	**101793**
CO_2 emission (t/y)	205	45	75	**326**	165	39	69	**274**	46	1	21	**69**

	2012				2013			
	SCHOOL	GYM	NURSERY	TOTAL	SCHOOL	GYM	NURSERY	TOTAL
Heating (m^3/y)	10351	37	4923	**15311**	572	0	507	**1080**
DHW (m^3/y)	10839	0	1977	**12817**	8148	0	102	**8250**
TOTAL	**21190**	**37**	**6900**	**28127**	8720	0	609	**9329**
Offset CH_4 (m^3/y)	61317	18301	23416	**103034**	73787	18328	29708	**121822**
CO_2 emission (t/y)	53	0	17	**70**	22	0	2	**24**

Table 1. Detailed analysis of natural gas consumption of the Morahalom demo-buildings over the course of GEOCOM

Having a second and closer look on the data it becomes evident that the achieved savings become more and more significant year-by-year as the project progressed and the finished individual investment components started to work together, complementing each other towards a highly efficient end result. For example the three buildings were connected to the geothermal cascade system during 2010, which immediately resulted some decrease of natural gas use projected for the whole year, but the major breakthrough came in 2011, when the total amount of natural gas used for heating purposes at the three locations dropped almost by 90%. Additional savings were realised by retrofitting the subject buildings. By improving the thermal qualities of the building envelope the amount of gas needed has decreased even further reaching only 1,1% of the initial value from only 5 years earlier.

The amount of gas required for domestic hot water purposes also decreased as the project went on. On one hand more efficient units were installed to replace the out-dated wasteful equipments while on the other hand the solar thermal panels were deployed on the rooftops at each estate taking advantage of the solar features of the region. As a combination of these actions we managed to cut the amount of natural gas needed for DHW production by 77% compared to 2009 and before. Today it is safe to say that the GEOCOM-actions not only helped the municipality to spare 92% of the gas it spent earlier on these three buildings, thus generating major savings, but they contributed to reduce local CO_2 emissions down to 7% of the same value back in 2009, cutting such emissions by approx. 300tonnes annually.

The two CHP engines are also making up for all the preliminary expectations regarding their performance and reliability. The one at Hunyadi-liget, mounted on the B-45 well has been generating an average of 25.000 kWh power per month with an average output of 47kW since its installation in October 2012 of which between 4-11000 kWh (~7900kWh) is fed to the national grid while the remaining is used onsite. It is used over 96% of the time during the heating season while in the summer this value is down to 30%, making an average of 72% usage. The power produced by the other unit at the spa (~19000kWh/month) is fully consumed on the spot, with no feed to the grid at a lower average monthly output (28,5kW) but with higher utilization rate of 91%.

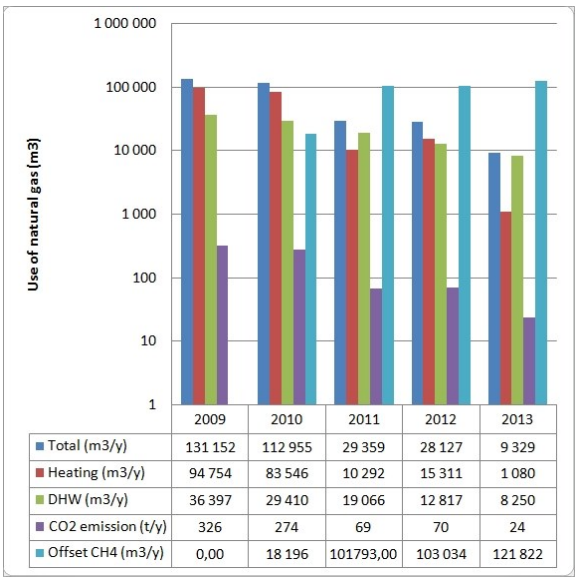

Figure 6. Evolution of CH_4-use at Morahalom

2.2 Galanta

The GEOCOM target buildings at the Galanta demonstration site were already using renewable energy for heating and DHW purposes well before the project started. However this did not mean that their energy performances couldn't be improved significantly thus making them to use less heat to maintain the same level of comfort. The reduced heat demand means that additional estates can be connected to the district heating without any major capacity building. Within the project not only the energy efficiency of some of the most wasteful structures was improved but also the district heating system was extended to serve some new social housing units nearby. The retrofitting actions included the replacement of doors and windows of the common areas (such as stair cases) and facade insulation with the combination of 70mm thick EPS polystyrene and rockwool (the latter was needed for fire safety reasons above 22meters of height at each building. The roofs received 100mm of XPS polystyrene insulation.

U-values at each of the subject surfaces had improved by an average of 60% significantly reducing the overall heating requirement for each of the blocks-of-flats which was in the range of 255.000 kWh/year average per building. As such standard energy performance actions can be implemented quite fast these buildings were benefiting from the project's results from very early on. Monitoring data shows that the average heat requirement has dropped down to an average of 150.000 kWh/year, which is 60% of the initial value, meaning 40% savings on the annual heating energy demand. The realised saving on the three buildings is over 1000 GJ which is more than the annual heating energy demand for any of the retrofitted buildings before the GEOCOM actions. On a household level these figures translate to over 150€ savings per year on the heating bill. As an important component of the demonstration aspects of GEOCOM system integration measures were also delivered to improve and complement the energy efficiency steps. To meet this objective a small-scale solar PV system was deployed on the rooftop of each multi-storey building with a nominal output of 2,16kWp to cover the power need of the common areas (basement, staircase etc).

After the retrofitting actions a total number of five new estates were connected to the city's existing geothermal heating network in 2012 to take advantage of the surplus heating energy which is no longer needed at the retrofitted housing units.. The newly installed capacity of this latest extension of the district heating system is 774 kW and 465 kW for heating and DHW purposes respectively (1239 kW total). The improved DHW capacity required to installation of additional circulation pumps and a new heat exchanger, too.

The replication potential of the GEOCOM actions can be very well measured by the number of small-scale private initiatives in the past 4 years, which have been launched in the neighbourhood driven by the owners to take advantage of the results yielded by the project and to improve the energy efficiency of those similar buildings which did not participate in GEOCOM. Energy savings generated by these additional side-projects will offset further capacities on the heating provider's side making it seek for more consumers to provide them with renewable energy.

2.3 Montieri

The complexity of all the preparatory works in terms of legal, regulation and financial aspects related to the dual-funding scheme inherently carried the potential of some delays starting from the very beginning. The volume of the planned investment coupled with the technical, social and environmental issues along the implementation of any project of such magnitude caused further deviation from the initially set schedule. Even by anticipating some of the forecasted delaying factors and having allocated an adequate amount of time in order to finalise the necessary framework, the original time frame had proved to be insufficient which resulted in the late start of delivering the Geothermal District Heating network and the related investment components. According to the original and very ambitious plans, the brand new geothermal district heating network in Montieri should have been commissioned in 2012. In reality, the delivery of this project item is expected by the end of 2014. For this reason at the current stage of the project no monitoring data is available to demonstrate the benefits the GEOCOM investment brought to the local community.

3. CONCLUSIONS

Even though the GEOCOM project is not yet concluded the major investment components have already been carried out and are in place. Based on the results so far it is safe to say that renewable energy related investments have the potential to make the difference when it comes to energy efficiency, sustainability and economic viability. The unique approach of our project at a European level, focusing on direct heat applications of geothermal resources demonstrates that even low-medium enthalpy geothermal systems, which are so much more abundant than their high temperature counterparts can be harnessed effectively using state-of-the-art technology and adequate planning. It is evident now, that even small communities can be subject of such high-profile interventions yielding very tangible savings, thus improving the economic potential of these, usually quite vulnerable municipalities. The three demonstration sites provide excellent geographic coverage with a slightly more emphasis on Eastern-Central Europe, home to the best low-medium enthalpy regions in the continent. The local actions in each of the participating countries are believed and expected to be adopted by neighbouring communities in the future for their benefits. The ultimate goal of the project is to spread knowledge and proven technological solutions among our target group of municipalities and decision makers reinforcing direct geothermal heat applications and systems in Europe.

ACKNOWLEDGEMENT

GEOCOM is a project of the CONCERTO initiative co-funded under the European Union's Seventh Framework Programme for Research and Technological Development under Contract No. 239515.